Christian Engineers and Scientists in Technology Newsletter

Spring 2011 Issue 18 **American Scientific Affiliation/Canadian Scientific & Christian Affiliation**

IN THIS ISSUE

From the editor

●You've already seen and heard much news–mostly incomprehensible–about the nuclear power plant accident at Fukushima, Japan. In order to get a better understanding of the situation we asked ASA member Ian Hutchinson, professor of nuclear science and engineering at MIT to describe what has happened for us. Many thanks to Dr. Hutchinson.

●We received one correct solution to the Math Challenge posed in the last issue. It was received from Edward B. Allen, Ph.D., Associate Professor and Graduate Coordinator, Department of Computer Science and Engineering, Mississippi State University. Thanks, Ed, for taking the challenge, and meeting it!

●Now I have provided another Math Challenge. It builds on the one Ed solved. Can you solve it?

●There is another way to desalinate sea water, and it may be cheaper than thermal desalination and reverse osmosis. It may also be useful for waste water treatment.

●Remember the news we read several years ago about getting algae to make diesel fuel? Well, it looks like people have been pushing the related technology forward. Read about it here.

●And, last, there is an article by Dennis Feucht, *Science and the Manifestation of God.* Reminds me of the verse from Job: *Canst thou by searching find out God?*

BY ■

Nuclear Emergency in Fukushima Japan

By Ian Hutchinson, Professor of Nuclear Science and Engineering, MIT.

At 2:46pm on Friday 11 March, a magnitude 9.0 earthquake occurred in the sea off the main island of Japan. The nuclear reactors at Fukushima Daiichi (site 1) that were running at the time (reactors 1-3) automatically shut-down within seconds. The other reactors at the site (4-6) were undergoing routine maintenance and refueling at the time, not in operation. The site was cut off from the electricity grid and the on-site backup diesel generators started automatically to maintain power at the site.

Less than an hour later, the tsunami swept through and knocked out the backup generators and the electricity switchyards. The plant went dark. The emergency batteries have only enough stored energy for a few hours. Complete loss of site power was very bad because, even though the fission reactions that power the plant are stopped, there remain unavoidable radioactive fission products in the fuel that continue to generate "after-heat". That after-heat in the first hours is roughly 1% of the prior operating power (the full power ratings are 460MW for reactor 1 and 780MW for reactors 2,3). The way the heat decays with time after shut-down is illustrated in Figure 1. It is essential to retain cooling circulation in the reactors to prevent overheating. There was no power and practically no access to the site after the tsunami went through. Cooling was not maintained, so overheating began.

If the water in these boiling water reactors overheats, it is vaporized and eventually uncovers the tops of the fuel rods. At that point they heat up even more because the cooling effect of gaseous steam is much less than liquid water.

When the zirconium alloy cladding on the fuel rods reaches a temperature between 1500 and 2000 degrees C, a chemical oxidation reaction occurs between the Zr and the steam which releases hydrogen. As this process proceeds, the pressure builds up further in the reactor vessel, and eventually must be relieved if the vessel is not to rupture. Relieving the pressure requires the release of the gas from the reactor vessel. Performing this release is a very serious decision because the gas may contain high levels of radioactivity including volatile fission products. In the case of Fukushima this gas is released into the reactor building. Because there was no electricity on the site, the fans that were designed to vent the gases from the building were inoperable. Hydrogen built up in the top of the buildings to a level where, mixed with atmospheric oxygen it became explosive, and was somehow ignited, blowing the roofs off the buildings.

Used fuel rods are stored in pools in the reactor buildings. Blowing the roofs off exposed the fuel pools. The rods are covered by deep water that contains radioactivity, shields against radiation, and keeps them cool. Heat exchange with those pools was also interrupted. However, they ought to have warmed up gradually eventually leading to moderate water evaporation. A week or two's worth of after-heat capacity is present in the pools so there should have been considerable time to take remedial action. We don't now know the extent to which pools experienced loss of water by

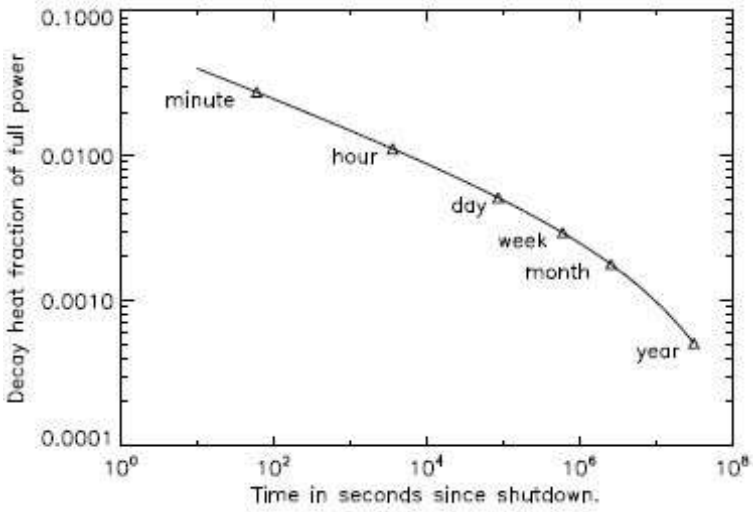

evaporation or leakage. But major efforts (using improvised techniques widely reported) were undertaken to add water to the fuel pools.

Now, three weeks later, electric power has been restored to the site, but bringing the various pumps, valves and other systems back under full control is seriously hampered by the water and the high levels of radioactivity on the site. Therefore, even though the after-heat is now down to perhaps 0.3% of full power, maintaining sufficient cooling circulation is still not straightforward. In any case, the damage has been done. Reactors 1-3 are believed all to have significant melting of their fuel rods, and the reactor 4 building has been seriously damaged by fire and explosion. All are write-offs, but the efforts to bring the station to cold shutdown will continue for months and years. Water that is now radioactive must be stored and then decontaminated. The radioactive dust must be fixed by coating with a glue-like substance and then gathered up for disposal.

Radiation releases beyond the plant have fortunately been relatively modest. At its worst, the sea near the Daiichi plant has reached the level where drinking a pint would give you roughly an annual background dose of radiation. That's negligible. The natural salt in the sea water would make you sick. The radiation wouldn't. There have been no significant radiation exposures of the public outside the plant so far as we know. There may be a few hot-spots within and just outside the 20km zone that will need subsequent remediation. The immediate vicinity of the power plant has very substantially elevated radiation levels, which are now dropping day by day. But it remains to be seen what the long-term external radioactive decontamination problems will be.

We need to keep the nuclear events in perspective. This was one of the biggest five earthquakes ever recorded. The infrastructure of the region affected by the tsunami has been severely damaged. Water supplies, electric power, buildings, cars, roads, railways and so on were wiped out by it. The evacuation of the 20 (and then 30) kilometer zone has been an extra burden on the local emergency resources. But it is still only a small fraction of the overall disaster. Events at the power plant have produced a handful of casualties most of which are not from radiation. By contrast, the tsunami itself appears to have swept between twenty and thirty thousand people from the Sendai region straight to their deaths.

Nuclear plants in the US are not so far as we know subject to tsunamis. They are to the best of our knowledge and design safe. Lessons that we can learn from the events of Fukushima are going to be drawn in the next months and years, and appropriate adjustments to design, operation, and emergency planning implemented that will reduce risks even further. In hindsight there will be many arguments that the design of the Fukushima plant should not have been for a 5 meter tsunami but for a bigger one. The rational question to ask, though, is not whether the plant could have been designed to withstand a bigger tsunami (it could) but whether resources devoted to such a design would be best spent on that, or on other things. For example, one could certainly have designed barriers or other defense mechanisms for the villages in which thousands have drowned. Would it have been better for additional resources to be spent on those villages or on further hardening the reactors? We should not minimize the responsibility of nuclear engineers (like other engineers) to design systems that are safe. Nuclear facilities world-wide have, by any quantitative measure, a remarkably good record of safety. But like any powerful technology, the potential exists for them to cause serious damage, which engineers are responsible for considering and mitigating to the extent feasible.

The people of Japan have suffered a major disaster: the earthquake and tsunami. They've simultaneously experienced a far more minor disaster whose unfolding has distracted the media: the damage of the Fukushima reactors and the associated radioactivity. There are no health effects whatever to be anticipated in the rest of the world. We should not be worried about ourselves. We should be concerned for the Japanese. Our prayers are with them.

Ian Hutchinson

April 5, 2011

A vast amount of technical information is available on the web concerning the situation at Fukushima. MIT students have set up a technical information site http://mitnse.com/ which has received massive attention. There are many others. Press coverage has been immense but the information is very uncertain. Even engineers at the site itself will not know anything like the whole story for months.

IH

Correct Answer! Math Problem Challenge

In the Winter issue I offered the following challenge for the reader:

Two circular cylinders, each with diameter d and length L, have center lines that intersect at right angles (see figure). What is the volume inside this structure?

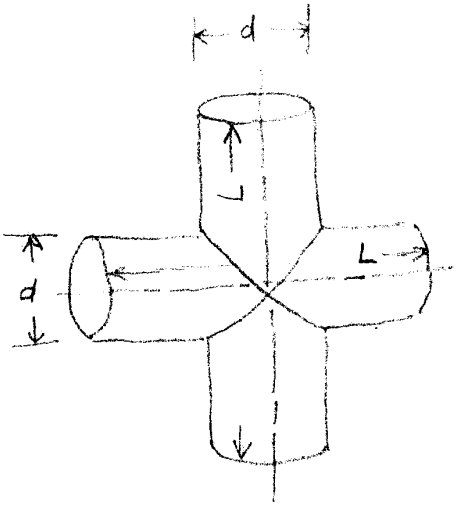

I received one correct answer. It came from Edward Allen of the Department of Computer Science and Engineering at Mississippi State University. Here is his solution:

Bill,

35-40 years ago Scientific American posed a related problem: What is the volume of the intersection of two cylinders? The published answer went back to Archimedes, who observed that the ratio of a sphere to the intersection is equal to the ratio between the area of a circle and the area of a square. --- No calculus needed.

You posed the Union problem which is the sum of the volumes of both cylinders independently minus the volume of the intersection.

r=d/2

volume of sphere = 4/3 pi r^3

area of circle = pi r^2

area of square = 4 r^2

volume of intersection

= 4/3 pi r^3 4 r^2/(pi r^2) = 16/3 r^3

volume of two cylinders = 2 pi r^2 L

volume of union

= (2 pi (d^2/4) L) - ((16/3) (d^3/8))

Best regards,

Ed

Congratulations, Ed!

So Ed found the solution without doing the integration. Good work. I have set up and solved the integral; it is not that difficult. BY ■

Next Math Problem Challenge

This next math problem builds on the last one.

Three circular cylinders, each with diameter d and length L, have center lines that intersect at right angles (see figure). What is the volume inside this structure?

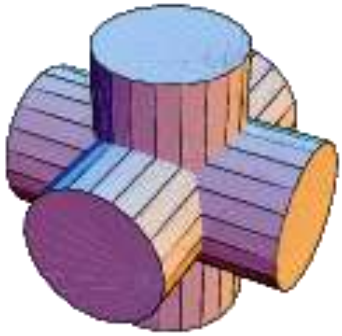

Figure from mathworld.wolfram.com

Send solutions to lwyoder@ieee.org. I will acknowledge correct answers in a future issue. BY ■

A Cheaper Desalination Method

I first read about the *Oasys* desalination method in the March 14, 2011 issue of Bloomberg Business Week. Then I found more information online, including the article in MIT Technology Review at http://www.technologyreview.com/energy/26916/page1/?a=f.

Instead of using thermal desalination or reverse osmosis, this method uses forward osmosis in which water is drawn through a membrane into an even "saltier" solution than the seawater. The "saltier" solution is a "draw" solution containing ammonium, carbon dioxide, and "some other secret stuff". Once the pure water has moved through the membrane, the draw solution solutes are removed by heating to 122 °F, leaving behind pure water. The heat required could be provided using waste heat from a power plant.

It is claimed that this system will produce desalinated water for only a tenth of the cost of a reverse osmosis process. *Oasys* is planning to take orders for commercial systems later in 2011.

It has also been suggested that this approach could be used for wastewater treatment.

BY ■

Beyond Fuel from Algae

Several years ago we noted that some researchers were reporting that they could get oil from algae that could be used in diesel engines and otherwise for fuel. Now it appears that these ideas have gone a few steps farther.

In an Associated Press article published in The Sun [Lowell, MA] on 3/14/2011, it was reported that The Massachusetts biotechnology company, Joule Unlimited, has invented a genetically engineered organism it says secretes diesel fuel or ethanol wherever it finds sunlight, water, and carbon dioxide. According to the article, Joule says it "can manipulate the organism to produce the renewable fuels on demand at unprecedented rates, and can do it in facilities large and small at costs comparable to the cheapest fossil fuels."

According to information on their website at http://www.jouleunlimited.com/ Joule combined "breakthroughs in genome engineering, bioprocessing and hardware engineering to form an integrated, commercial-ready solution with unprecedented scale and productivity rates. Requiring only sunlight and waste CO_2, this system can produce renewable diesel fuel in virtually unlimited quantities at costs as low as $30/barrel equivalent, overcoming the challenges of oil exploration and production."

Joule has a medium scale production testing facility in Leander, TX.

Again, from their website, "Joule efficiently captures sunlight to produce energy in liquid form, enabling tremendous scale, storage and transport of energy without the power degradation that limits storage of electricity. This advantage, combined with our direct, continuous process and use of waste CO_2 as a sole feedstock, creates the potential to deliver virtually unlimited quantities of fuel. We currently target commercial delivery of up to 15,000 gallons of diesel and 25,000 gallons of ethanol per acre per year at full-scale production. Furthermore, the modular design of our system makes it readily extensible from smaller industrial operations to large-scale commercial plants, minimizing scale-up risks."

BY ■

Science and the Manifestation of God

Article by Dennis Feucht

God Is Not Subject to Our Scrutiny

In the "invisible gardener" argument against the existence of God, ex-atheist Anthony Flew posits a garden that by its appearance is well-tended, though the gardener never appears in it. When it is suggested that perhaps the gardener is invisible, increasingly elaborate measures are taken to detect the gardener, but all of them fail. The reasonable conclusion, Flew argues, is that the gardener does not exist.

This argument would be difficult to refute if used against pagan gods, such as the overblown humans of the Greek pantheon or the gods inherent in regions of nature, as understood by most of ancient paganism. Like ourselves, these gods were captive to the same historic processes we are, and move along with us in space and time. They also are subject to human scrutiny, so that their being is open to human investigation.

But the biblical god (*i.e.*, God) is of a fundamentally different nature. As creator of our universe, he does not have the space-time limitations of pagan gods. Neither does his self-revelation to humanity subject him to our scrutiny, as though we could scientifically study his being. A God who transcends our space-time does not intersect it in such a way that, if only we "looked under the right rocks" his essence would be revealed to us.

The biblical accounts of encounters between God and humanity show a different pattern of human response to God's manifestation in history. When

Moses ascended Mt. Sinai, he returned, not with profound insight into the nature of God's existence, but with a heightened sense of the contrast between God's personal character and that of Israel's, in its severely limited pagan conception of the deity, as depicted by the golden idol of a calf made by his co-leader, Aaron, at the people's insistence. The state of mind of Moses after forty days in God's presence led to his forceful response, so strong was Israel's error in the light of what he had experienced of the God who led them out of Egypt.

Israel repeatedly asked God for his *name*, which meant insight into his essential character. Such insight could provide the knowledge required to control God's actions – and what powerful control that would be! God's reply was the enigmatic: "I am being who I am being." God's intention in creating humans was not for our control of him. This point, though seemingly an irrelevant one, figures significantly into the question of how science and religion intersect.

Later, when in captivity, Israel's intellectual elite were placed in the service of the king of Babylon. Of these, Daniel had an encounter with the "Ancient of Days." His response was not "Eureka!" but an overwhelming sense of his personal inadequacy in the presence of such a superior being. One of Israel's more prominent prophets (who were not so much crystal-ball gazers but prosecuting attorneys for God, suing Israel for breach of covenant), Isaiah, also found himself in the presence of God. His response was characteristic of such encounters; he did not come away enraptured with a sense of illumination, but was instead impressed by how far he fell short of God's character, and exclaimed, "I am a man of indecent speech." (Isaiah 6:5)

Much later, in the New Testament, when Peter, one of the inner circle of followers of Jesus, realized that Jesus was God in human form, his response also was not that of a person for whom an intellectual problem had been solved. He exclaimed, "My Lord and my God." In other words, Peter recognized that the biblical God confronts us, not in such a way that we would be prepared to scrutinize the nature of his being, but to respond according to his creative intention for us: to relate to him as a person, in love and obedience, as created being to Creator.

A God whose self-revelation to humanity is in terms of obedience, not curiosity, does not present himself to us in such a way that the arguments of atheists for evidence against God applies. Such arguments are intended for lesser gods.

Science and God

Science is a human activity of scrutinizing the creation in such a way that the resulting insights into its nature offer the potential of control over it, according to our purposes. As a popular introductory physics textbook says: "The base of engineering, once largely empirical, is now largely scientific." (*Physics*, Resnick & Halliday, preface to 1960 edition) The previous argument about how God reveals himself to humanity concludes that God cannot be the object of scientific study. God does not manifest his being in our history in such a way that he could become the object of our scrutiny.

While this limits the way in which we can relate to God, by ruling out scientific study of his nature, this limitation does offer us insight into the kind of being we are encountering. God is the kind of being to whom we can only relate in ways he has prescribed, involving our character and intentions toward him and not our scientific curiosity. God's mode of interaction with us, therefore, is not one that allows us to invoke a scientific approach to the interaction. This God is one who does not turn control over to us when we encounter him. As for ancient Israel, interaction without control is humanly undesirable. It is the underlying reason for atheism; if God cannot be controlled, let's ignore him.

So far, this line of argument only defines *how* we can know God, not that we can. To argue that such a God is removed from human scrutiny seems an argument for atheism, not against it. Evidence of some kind for his existence must lie within the bounds of ordinary investigation under our control (science). The biblical account in Genesis of God's purpose for creating the man (Adam) strongly suggests that he is to exercise control over the creation ("have dominion" – that is, stewardship) and to do so by applying his intellectual powers to the task ("name the animals"). This suggests that one aspect of God's intention in creating us is for us to exercise this kind of control over nature; and it is within *our* nature to do so. This control, however, is limited in the scope of its application.

While the mind of God falls outside our range of study, we are invited by him to discover insights into how he has applied it in his work of creation.

Science and Eschatology

The biblical view of history places us in a time which is the overlap of two ages – of faith and sight. In the present age that is passing away, God has revealed himself to us in the person of Jesus. This revelation is ambiguous generally, for his mighty works were witnessed by both those who recognized they were in the presence of God, and others who regarded the same events as conjuring tricks. Those for whom Jesus was the Christ, the son of God, found in this revelation an integrating framework of general understanding. The world and life became comprehensible to them as never before. For unbelievers, God remained hidden; the difference was in how the events were regarded and the framework of presuppositions by which they were interpreted.

Jesus addressed this issue directly in one of his parables about a man who had landed in hell. He begs that at least his brothers be warned not to make the same mistake. But the argument from heaven against him is that it would be pointless; the brothers would not believe anyway, because they already have the biblical (Old Testament) revelation. But, the man pleads, "if someone from the dead goes to them, they will change their minds." And the reply is that "If they do not listen to Moses and the Prophets, they will not be convinced even if someone rises from the dead." (Luke 16:31) The point can be made that no amount of evidence constitutes incontrovertible proof for the existence of God. The question that remains, however, is how much evidence need be produced from the study of the creation to conclude that the Creator is in fact there.

Immanence and Transcendence

Some people look to general revelation for evidence for God and emphasize the approach which looks for God as he reveals himself in history, within the universe – God immanent. Some others instead emphasize the transcendent aspects of God. The unique

biblical view of God is that he is not an extension of the universe but is distinct from it. Which emphasis is correct? God is both immanent and transcendent.

Those emphasizing the immanence of God are concerned about an extreme view of transcendence (deism) because the rhetoric from some secular establishment scientists is that it is okay to believe in God as long as you don't claim that he does anything in the world. These people emphasize evidence for God within the creation. Included are those of the concordist approach, that of finding evidence for God in science.

Those emphasizing transcendence are concerned that God not be reduced to mere immanence, like the pagan gods. They emphasize the importance of special revelation in revealing how God makes himself known to humanity. The concern is that God is too big to be reduced to the scientifically conceivable without doing injustice to his character. Looking for God within nature is subject to the God-of-the-gaps problem and is considered to be the wrong place to try to find him.

Closure

The biblical God is both immanent in space-time history - in the creation - and transcendent. His actions are observable so that there can be historic evidence of his interactions with humanity. Concurrently, God never subjects himself to a position of scrutiny by humanity. The creation is so subjected, but not the Creator. Because of this, science and history offer clues to God's existence, but God's existence cannot be directly demonstrated on demand, either empirically or rationally, apart from allowing certain worldview assumptions. As the early Christians said, God is like the sun. You cannot see the sun directly; it's too bright. But everything that can be seen is seen because the sun illuminates it.

Dennis L. Feucht

AUG 1997

MAY 2010

MAR2011

The YahooGroup
asa_cest@yahoogroups.com
was established to provide a mechanism for CEST members to keep their entries in the CEST email address list up to date. For CEST members not in this Yahoo group, we use email addresses from the ASA's new online membership directory. However, past issues of our newsletter will continue to be archived at the Yahoo group's web site, where they are accessible to group members. To join our group, go to:

groups.yahoo.com/group/asa_cest/join

and follow the instructions.

Bill Yoder, ed. ■

CEST CONTACTS:

Newsletter correspondence: Send to Bill Yoder, CEST president, at LWYoder@ieee.org

CEST secretary: Jack Swearengen at jcswear@sbcglobal.net

CEST founding president: Ruth Douglas Miller at rdmiller@ksu.edu

American Scientific Affiliation
55 Market St., Suite 202 ~ PO Box 668
Ipswich, MA 01938